PARTS FOR THE VARIEZE SPEED BRAKE

(5) AN4-5A	.45
(6) AN525-10R10	.72
(10) MS21042-3	1.20
(4) AN3-7A	.32
(3) 1/16 Nycropress sleeve 18-1-C	.30
(2) 1/16 thimbles AN100-3	.20
(1) K1000-4 nutplate	.28
(1) AN970-4 washer	.04
(1) AN4-22A bolt	.18
(1) MS21042-4 nut	.15
(2) AN960-416 washer	.03
(6) AN960-10 washer	.08
(10) AN470 AD4-7	.20
(1) .125 x 7" x 13" 2024T3 aluminum	4.78
(1) .063 x 6" x 6" 2024T3 aluminum	1.00
(1) .250 x 3/4" x 2½" 2024T3 aluminum	.35
(1) 7/8 x .120 x 1/2" 2024T3 round aluminum	.35
(1) 1/2 x .120 x 1/2" 6061T6 round aluminum	.15
(1) .8 x 1" x .063 x 2" formed angle	.25
(1) .063 x 5" x 5" steel 4130 Sheet	.80
(1) 5/8 x .058 x 11½" 4130 steel Tube	1.08
(1) 1/4 x 28th 3.8" long .6" thread both ends	.50
(2) 5/8 maple dowel x 1" long	.40
(2) Heim bearings F34-14 rod end	6.50
(1) BC4W10 belcrank bearing	2.25

Speed Brake (Continued)

(1) Piano Hinge MS20001P5 8" long	3.12
$3\frac{1}{2}'$ 1/16 7 x 7 stainless steel cable	.56
	$ 26.24

VariEze MANUFACTURING MANUAL SECTION VI

LANDING AIRBRAKE

NOTE: This section consists of five 18"x25" sheets, Pg 1, 2, A1, A2 & A3.

The landing brake is a device used to greatly increase the airplane's drag for landing. The brake greatly improves the airplane's landing performance. Without the brake, the airplane must be flown with a relatively flat approach and an excessive amount of runway is used to slow the airplane down in the flare. The brake allows the approach to be flown steeper and faster, therby improving visibility over the nose. Deceleration in the flare is 70% more rapid than without the brake. The brake thus allows the pilot to use shorter runways since less precision is required to obtain the correct touchdown point.

The brake does not change approach speeds, touchdown speeds, or stall speeds. The brake is not a deceleration device for high speeds. Maximum speedbrake speed is 90 knots (104 mph). Above 95 knots (110 mph) indicated airspeed, the brake automatically closes to prevent overstress in case the pilot inadvertently flies too fast with it deployed.

The brake is operated by a handle on the left console (armrest). The handle is forward for brake closed and aft for brake deployed. There are no locks or detents on the handle. A spring in the system snubs the brake up in the closed position, provides a down load to relieve most of the drag load, and holds the brake down, once deployed. The awkward position of the handle in the brake-deployed position aids in reminding the pilot that the brake is deployed if he forgets it on his takeoff checklist. The brake induces aerodynamic buffet (similar to a Cessna-150 with full flaps) which is also a good reminder of brake position. Even though the VariEze still has adequate climb with the brake deployed (with the larger engines), climbs should be avoided due to the possibility of over heating the engine (the brake blocks flow to the air intake).

Normal operation is as follows: upon entry to the pattern, slow to below 90 kt (104 mph), extend the nose gear, slow to below 85 knots, extend the landing brake, fly the approach (70 to 80 knots/80 to 92 mph), land (touch down 55 to 65 knots), and close the brake after landing deceleration. The brake is also handy to wave back at onlookers as you taxi by!

The brake does not affect the airplane's trim, stability, roll rate, or stall characteristics.

The brake system shown in these drawings differs from the one in N4EZ in two areas: (1) The geometry of the LB13 handle is revised a bit to allow clearance with the cable and the kick-in step (newsletter 10), (2) Ball bearings were used where phenolic bearings are shown on LB1. Brake deployment loads were less than expected and since brake operation is only a once-per-flight cycle, phenolic bearings will provide satisfactory service with a savings in cost and machining. Steel-on-phenolic bearings are common in lightplane control systems and should require no lubrication in this application.

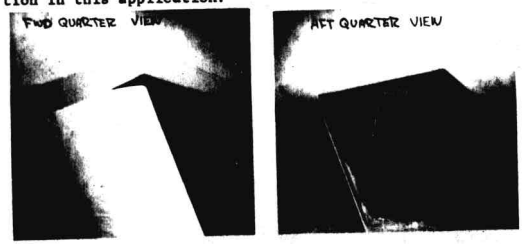

AIRBRAKE FITS IN A DEPRESSION UNDER THE FUSELAGE

Refer to the parts list and full size patterns. Cut out all parts. Weld LB2's and LB3 to LB1. LB3 will probably warp in the welding operation. Straighten as necessary. Rivet LB4 and LB5 to LB3 with the six rivets, aligning the cable holes in LB4 in the same direction as LB2's. Drill and tap a #10-32 hole in the pulley at the position shown and bolt on the LB10 arm. Install a Nicopress sleeve on the ends of two 20-inch lengths of 1/16" cable and thread through the holes in LB4. Refer to A2.

Round up some new 36 or 60-grit sandpaper and sand (to a dull surface) the areas around LB9 and LB7 plus 1" all around. Cut a 2-inch long x 1-inch wide hole in the floor at B.L.=0 and F.S.=67.5, as shown. The easiest way to cut this hole is to use a router bit in your dremel or electric drill. Extend this hole through the bottom skin.

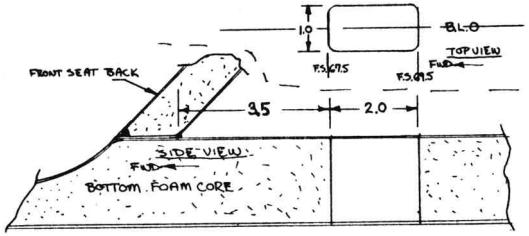

Remove the left armrest from F.S.56 aft, as shown. This can be done with a small pin router*, a saber saw, or a hacksaw blade. Cut the 5.3-inch x 0.8-inch hole in the front seat bulkhead, as shown in the drawings (A2&A3).

Bond (5-min or RAEF) LB7 to the fuselage side at W.L.=4.9, F.S.=68 as shown on the full size drawing. Lay up a four-ply BID patch over LB7 extending about 1" onto the fusealge side. When this reaches knife trim stage, remove the glass to expose the 5/8" hole in LB7.

Now, bolt LB8 to LB9; slip the LB6 spacer and washer onto LB1. Stick one end of the weldment into LB7 and the other end into LB8. Check the fit of LB9 to the seat bulkhead and to the floor. Don't be concerned about gaps up to 1/8"; they can be filled with flox. When you're satisfied with the fit, reinstall the assembly using flox (RAEF) to bond LB9 to the seat and bulkhead. Remove the bolts through LB8 and remove the weldment by sliding LB8 aft. Install a 2-inch wide, two-ply BID tape (RAEF) where LB9 butts to the seat and floor (see section F-F). Paint a coat of RAEF to seal the wood surface of LB9.

When dry, reinstall the weldment. A coat of zinc-chromate primer will protect the steel weldment from rust.

Locate the LB13 pivot location on the armrest (A1). Drill the 1/4" hole in the armrest. Sand the adjacent fuselage side for bonding of LB17. Rivet the nutplate to LB17. Bond (5-min) LB17 to the fuselage side and lay up the three-ply BID pad lapping 1" outside the edges of LB17. When cured, open the 1/4" hole in LB17. Rivet LB13 to LB14. Install LB14, LB16, the bolt, and the two AN970 washers. Use RAEF to bond the two washers to the armrest. Slot the armrest to allow LB13 full travel, as shown (8-inch long slot). Ref. PAGE A1.

Install the two AN100-3 thimbles and 18-1-C Nicopress sleeves on LB13, being careful to jig the proper position of the weldment corresponding to the proper position of LB13. The cables should be tight, without slack. You purests may want to install a turnbuckle, but at $12 each, we don't think it's required. Install the LB11 bracket with flox and rivets as shown on page A3.

Remove the canopy. Now, round up two steady sawborses or a bench, cover them with a rug pad, and flip the airplane upside down and set it on the sawhorses at F.S.50 and 110. This flipping operation requires four people if the engine is not installed and seven people if it is installed. Drain engine oil first. Refer to the sketch and using a pin router or a small dremel saw, slit the bottom skin along the 16"x16" outline. Peel the 16"x16" skin piece off and discard.

* A pin router is a 1/8" dia. drill bit designed to cut on the side flutes.

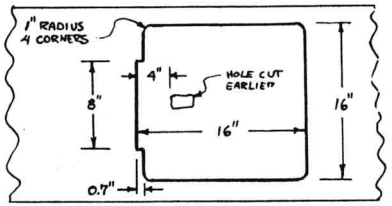

BOTTOM VIEW OF FUSELAGE
← FWD
SKIN CUTOUT IS CENTERED ABOUT B.L.0

Now grab a drill with a 1/4" bit, hold it at a 45-degree angle as shown, and slot the bottom floor foam to allow LB23 to be installed. This slot is 8" wide and centered about B.L.0. Refer to the full size drawings. Don't drill through the inside skin. Slip LB23 into the slot - don't bond in yet.

Referring to the full size drawings and to the accompanying sketches, remove fuse age bottom foam to provide a depression. The depression is about 0.5 to 0.6 below the original outside contour over the entire 16"x16" area to allow the brake to recess within the fuselage contour. In addition, more foam is removed to allow clearance with LB18, to bring inside and outside skins together at the hole, and to provide structural strength at the LB23 bulkhead. Refer to the full size drawings to see the extent of foam removal aft of LB23 and around the hole. The exact shape of the .5"-.6" depression and the other shaping is not critical. If you remove too much, even down to the inside skin in places, this is satisfactory. A sharp chisel, wire brush, or sanding block can be used to remove the foam. Once the depression is roughed out, use a 3"x3"x1" block of urethane for final carving and smoothing the corners.

VIEW OF DEPRESSION AFTER GLASSING.

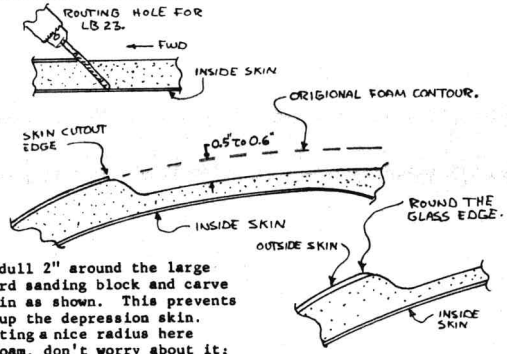

Sand the outside skin dull 2" around the large cutout. Grab a file or hard sanding block and carve a radius on the outside skin as shown. This prevents an air bubble when laying up the depression skin. If you have difficulty getting a nice radius here without undercutting the foam, don't worry about it; just trowel some dry micro in the corner immediately before laying on the BID cloth.. Careful stippling in the corner will result in a nice radius formed by the micro and an absence of any tendency to trap air. Troweling dry micro in the corners and around the edges of LB23 is recommended after slurrying the foam and before laying on the BID, even if you do have nice radiused corners. This will make the layup easier and eliminate air bubbles.

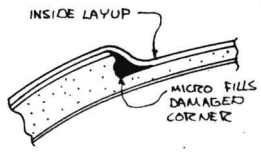

Remove LB23. Refer to the drawings to locate the position of the three bolts that will hold the hinge to LB23. Glue the three LB22 blocks to the front of LB23 with 5-min. Mark their position on the back of LB23 with a black marking pen so you can later locate them. Refit LB23 to the fuselage, removing foam to clear the BL22 blocks.

Cut two pieces of BID 20"x20" with fibers at 45° orientation. Now, using plenty of wet micro, install LB23. Wipe micro squeeze-out smooth, slurry the foam surface, and wipe a little dry micro into the corners. Lay up (RAEF) the two plies BID starting deep in the hole and wetting out toward the edges. If you encounter any air bubbles in the corners, lift the cloth and trowel in some wet or dry micro. Add, one additional ply, a 10"x4" piece of BID (@45°) laid up directly over LB23 as additional reinforcement. At knife trim time, remove the glass at the 1"x2" hole. Allow this layup to completely cure.

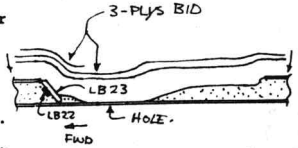

SEE ALSO PG A2&A3

Next step is to fabricate the foam core for the brake board. Grab a 15"x15" piece of 1" urethane foam; fit it down into the depression as shown. Put a small dab of 5-min about every 3" around the edges, weight the block down into the depression, and allow to cure.

Now, round up your knife, long sanding block, and a piece of urethane and carve the block down to a smooth surface, flush with the outside skin as shown. Make sure it's flat in the area where the hinge will be located. Tape the outside edges of the fuselage skin with grey Duct-tape (hardware stores have this) as shown.

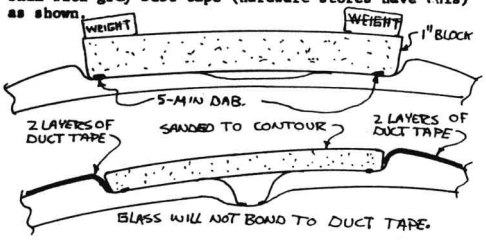

Now, cut three pieces BID 18"x18" @ 45° fiber orientation. Lay up the three-plies over the foam, lapping onto the grey tape. Knife trim as shown, being careful to cut down to the grey tape without cutting the fuselage skin. This outline now defines the overall size of the brake, 17" wide and 16" long with about 1" radius at each corner. Refer to the full size side-view drawing for trim at the front (at hinge). Let layup completely cure.

Now, build a frame to hold the brake from warping Grab some scrap lumber (1x2 or 1x4) and lay over the brake as shown using dabs of Bondo to bond the boards to the brake and to each other.

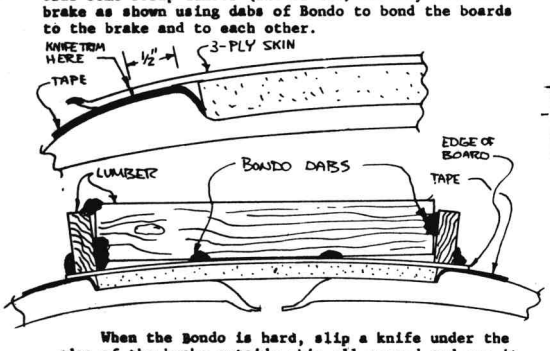

When the Bondo is hard, slip a knife under the edge of the brake outside skin all around and pop it free, lifting the scrap lumber/brake skin/foam core assembly off the airplane. Bring it to your table and place it foam-side-up. Remove all foam in the 3"x5.8" area where LB19 is located. Also remove all foam where the hinge is located. Referring to the full size section drawings, grab a small block of urethane and use it to round the foam core to the required shape around the hinge and LB19, and to make a smooth radius around all edges. Be sure to remove enough foam (1/10") around edges so the brake will fit the cavity after glassing the inside.

LB19 and LB24 are now bonded in place with flox. Use 5-min if you're in a hurry; RAEF if not. Tape the LB24 hinge around its center to avoid getting epoxy between its moving parts.

Lay up the inside skin using three-plies BID 20"x20" pieces @ 45° orientation. Knife trim flush with outside skin all around and as shown at the hinge. When completely cured (two days at 65° or one day at 75°) knock the scrap lumber off, install the four screws through LB24, and mount the two LB18 brackets. Check the dimension shown.

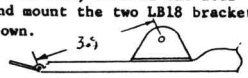

Check the fit of the brake on your airplane. Rotate the free flap of LB24 up against the face of LB23 to check its fit. When satisfied with the fit, put a couple of dabs of 5-min or Bondo on the flap of LB24 and place it against LB23 with the brake lying flat in its cavity. When cured, operate the brake and check for free operation over its 60-degree travel. Drill the three #3 drill holes through LB24/LB23/LB22. Tap 1/4 x28. Remove the brake, sand LB24 and the glass surface for bonding and install the three AN4 bolts using flox between LB24 and the glass.

Install the LB20/LB21 pushrod assembly, adjusting its length for the proper position of LB2 in the closed position. Check that the LB20 strikes the edge of the hole as shown in the side view at a position about 1/2" aft of the on-center position.

Now, hook up the two LB12 springs. They can be hooked over the bolt and LB11 bracket or sewn on with three loops of .041 stainless safety wire. Adjust the spring (LB12) tension such that a 40-lb pull at the trailing edge (as shown) will kick the LB20 away from its stop and automatically close the brake. If it closes at less than 40 lb, tighten LB12 tension. This adjusts the brake so it will close itself above 95 knots to prevent overstress.

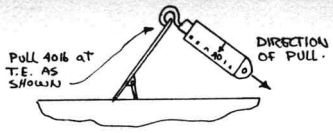

The next step adds a fairing ledge all around the brake to streamline it in the closed position. With its edges faired and sealed against leakage, the brake has a negligible effect on cruise speed when closed. Open the brake and tape Saran-Wrap or other thin plastic wrap to its edges as shown. Close the brake and trowel dry micro (RAEF) around the edges. When cured, sand in faired. Open the brake and remove the plastic. This easy fairing method can make a beautiful fill of any open areas or poor fits in front of the brake. You may have to remove a little micro ahead of the hinge to allow the brake to fully open.

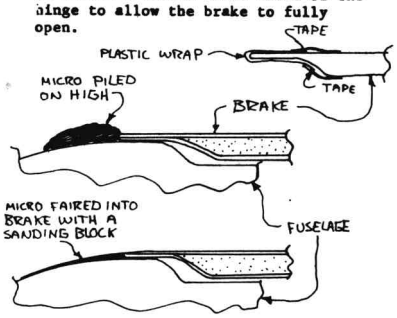

BILL OF MATERIALS

PART	NO.REQ'D	MATERIAL	
LB1	1	STL 4130 or 1020	Tube 5/8 O.D.x.058 wall 11.15" long
LB2	2	STL 4130 or 1020	.063 thick plate weld to LB1
LB3	1	STL 4130 or 1020	.063 thick plate weld to LB1
LB4	1	2024T3	.125 thick plate
LB5	1	2024T3	.063 thick plate
LB6	1	Alum or phenolic	Spacer 5/8 I.D., 7/8 O.D., 1/2" long
LB7	1	Phenolic	1/4" thick block, bearing for LB1
LB8	1	Phenolic	1/4" thick block, bearing for LB1
LB9	1	5-ply birch plywood	1/4" or 5mm thick. Can substitute dark red PVC with 3-ply BID both sides.
LB10	1	2024T3	1/8" thick plate
LB11	1	2024T3	.063 thick plate, clip to hold LB12
LB12	2	STL	Screen door spring .375 ODx1/16" wire dia, unstretched length approx 10".
LB13	1	2024T3	1/8" thick plate
LB14	1		Belcrank bearing BC4W10 (AN218-4) 1/4" bore
LB15	2	Hardwood or phenolic	1/2" OD dowel
LB16	1	Alum	Spacer 1/2" OD x 1/4" ID 1/2" long
LB17	1	5-ply birch plywood	1/4" or 5mm thick
LB18	2	2024T3	.063 formed angle
LB19	1	5-ply birch plywood	1/4" or 5mm thick 3"x5.6", notch for LB24
LB20	2		Rod-end, REB3N or REB3N-3 or Heim F34-14 or equiv.
LB21	1	STL or 2024T3	Threaded rod, 1/4x28 thd., 3.8" long, 0.6" thd both ends
LB22	3	2024T3	1/4" plate inserts
LB23	1	5-ply birch plywood	1/4" or 5mm thk 8"x2.4" bevel one edge
LB24	1		Piano hinge MS20001P5 8" long
LB25	3½'		1/16" 7x7 cable stainless or galvanized

FULL SIZE PATTERNS SCALE DIM. NOT SHOWN

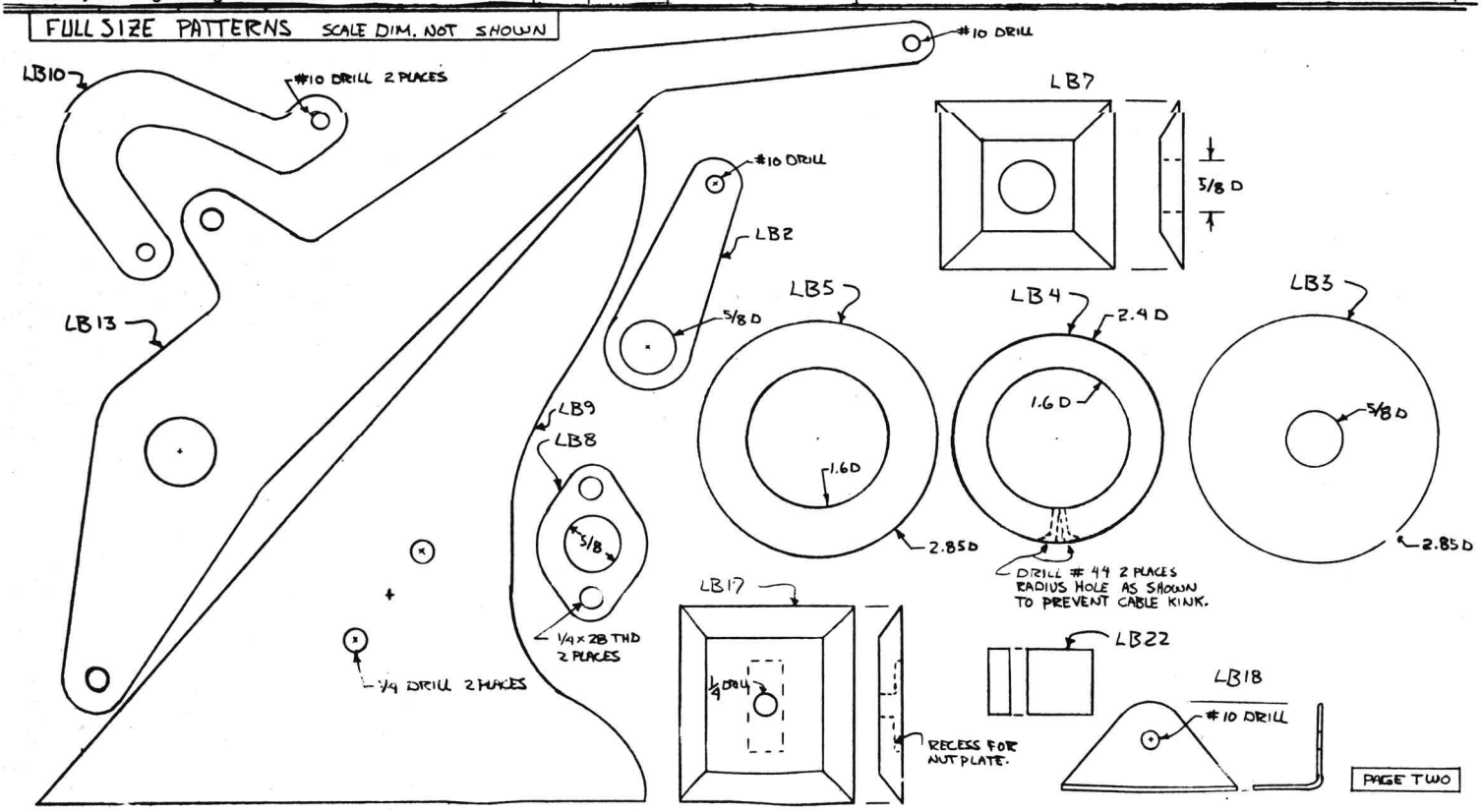

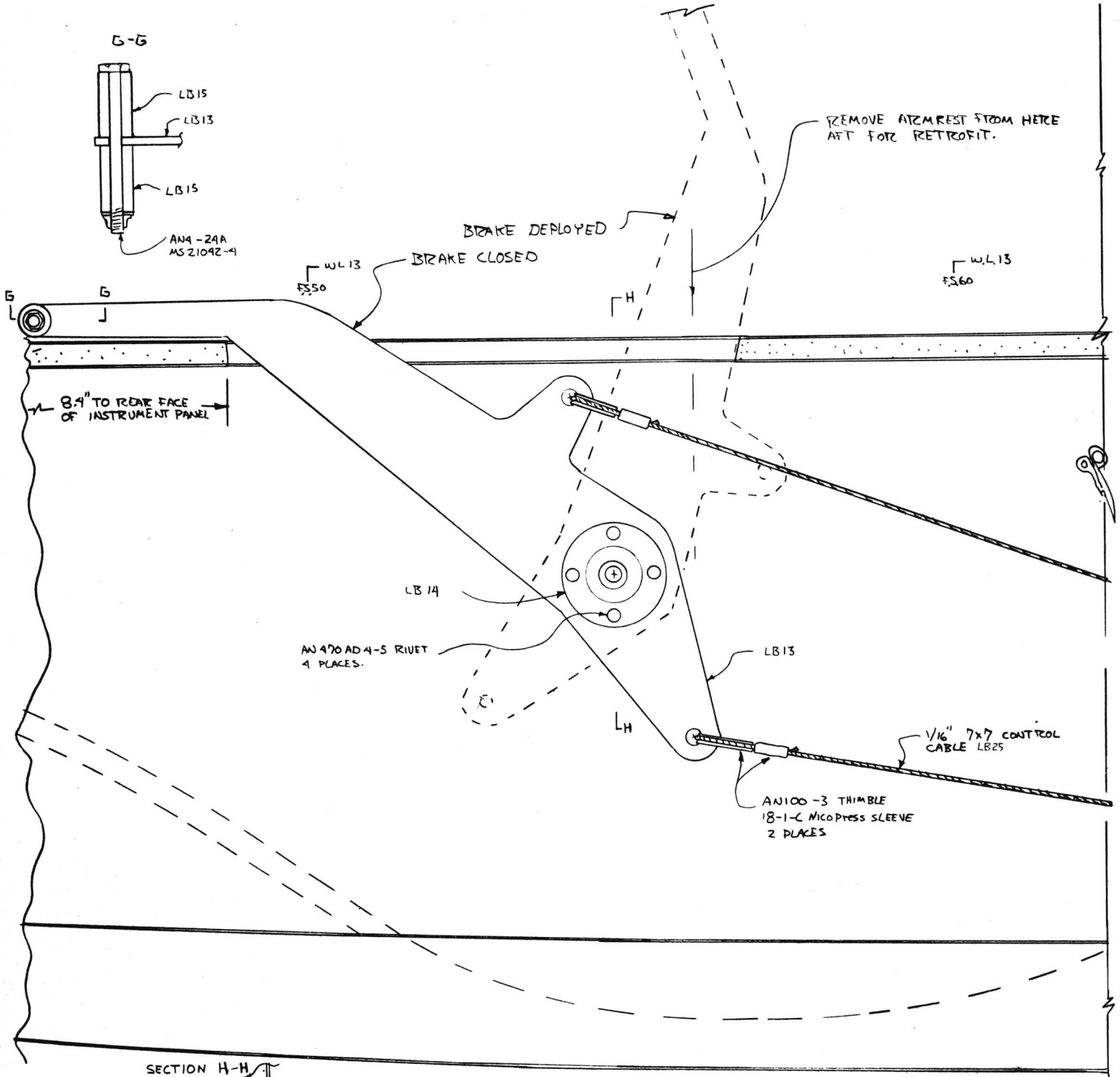

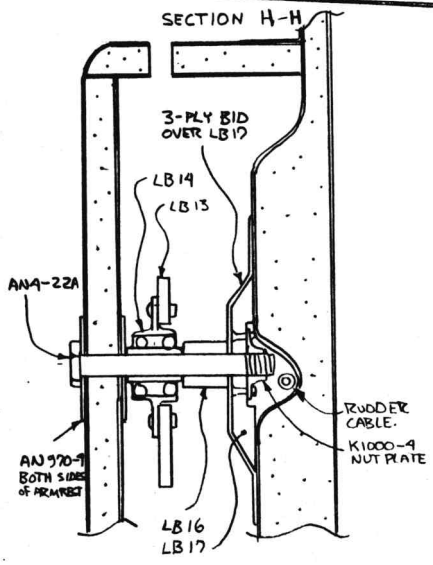

VIEW FROM LEFT LOOKING INBOARD
FULL SIZE

CUT PAGE HERE ATTACH TO A2 ON THIS LINE

VARIEZE LANDING BRAKE PAGE A1

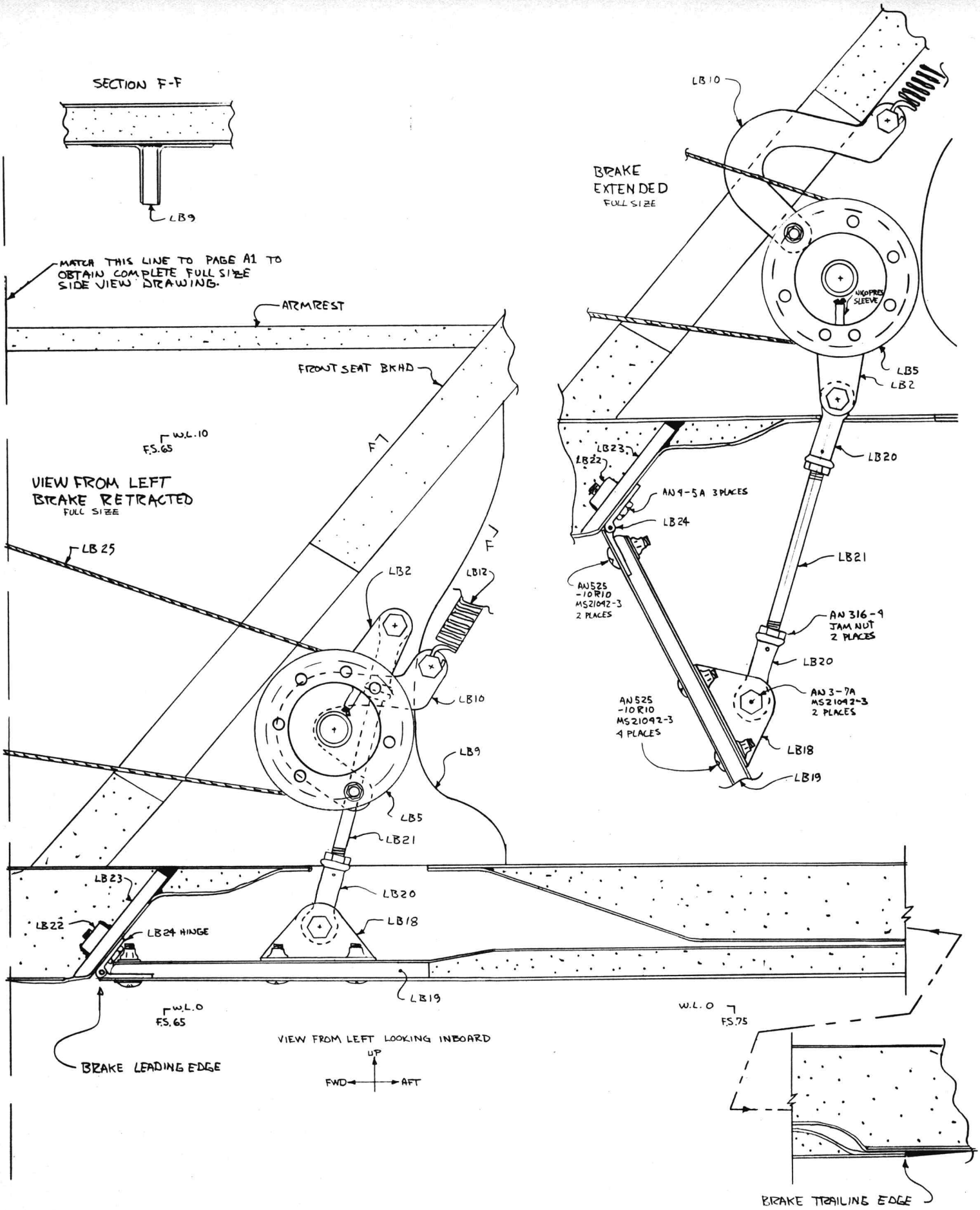

VARIEZE LANDING BRAKE
PAGE A2

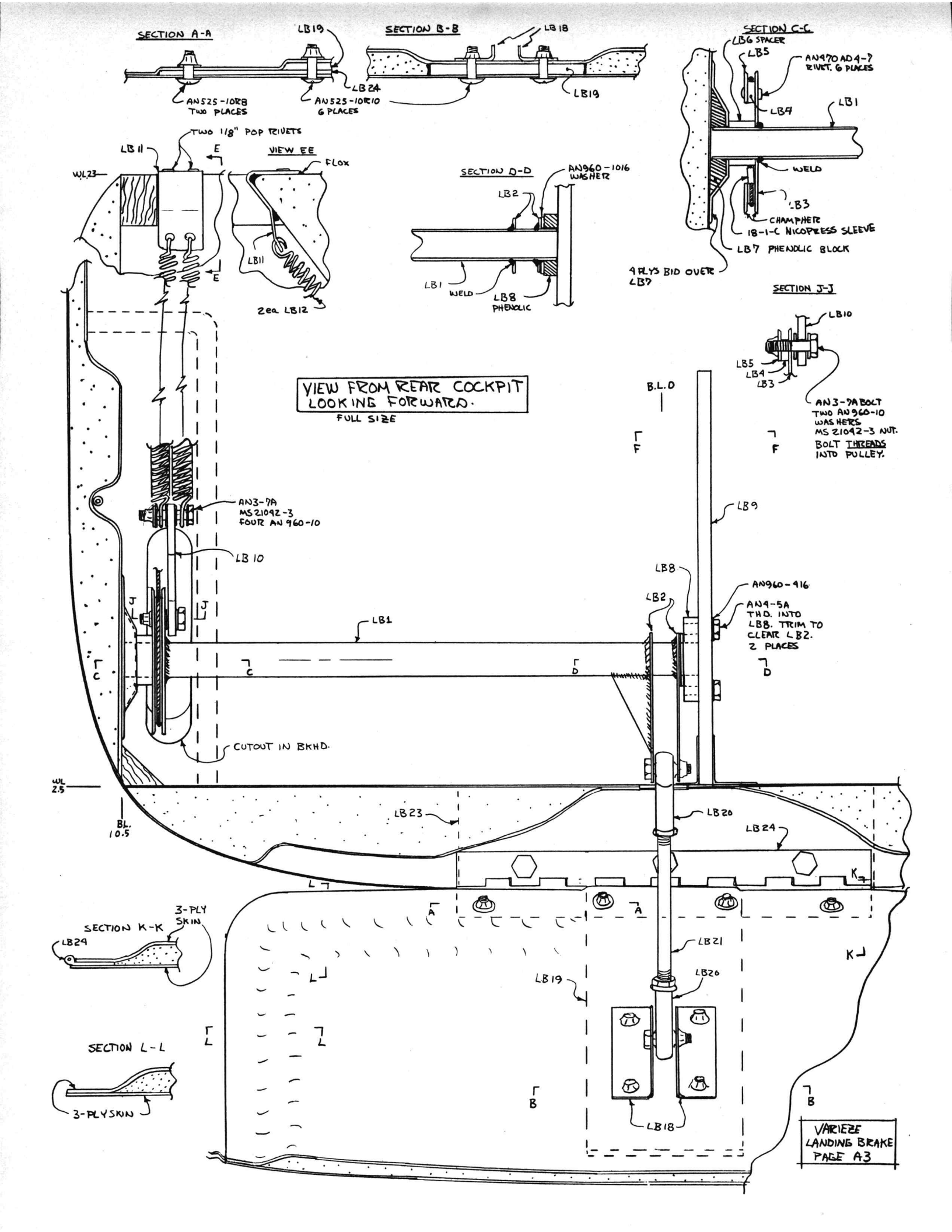
SECTION A-A
LB19
LB24
AN525-10R8 TWO PLACES
AN525-10R10 6 PLACES
SECTION B-B
LB18
LB19
SECTION C-C
LB6 SPACER
LB5
AN970 AD4-7 RIVET. 6 PLACES
LB4
LB1
WELD
LB3
CHAMFER
18-1-C NICOPRESS SLEEVE
LB7 PHENOLIC BLOCK
4 PLYS BID OVER LB7
TWO 1/8" POP RIVETS
LB11
WL23
E
VIEW EE
FLOX
LB11
2ea LB12
SECTION D-D
AN960-1016 WASHER
LB2
LB1
WELD
LB8 PHENOLIC
SECTION J-J
LB10
LB5
LB4
LB3
AN3-7A BOLT TWO AN960-10 WASHERS MS21042-3 NUT.
BOLT THREADS INTO PULLEY.
VIEW FROM REAR COCKPIT LOOKING FORWARD.
FULL SIZE
B.L.0
F
AN3-7A MS21042-3 FOUR AN960-10
LB10
LB9
LB8
AN960-416
LB2
AN4-5A THD. INTO LB8. TRIM TO CLEAR LB2. 2 PLACES
LB1
J
C
D
CUTOUT IN BKHD.
WL 2.5
BL. 10.5
LB23
LB20
LB24
K
L
A
3-PLY SKIN
SECTION K-K
LB24
LB21
LB19
LB20
SECTION L-L
3-PLYSKIN
B
LB18
VARIEZE LANDING BRAKE PAGE A3